宏于電機
HORNGYU ELECTRIC

台灣精品 TAIWAN EXCELLENCE 2021

國家品牌玉山獎 THE NATIONAL BRAND YUSHAN AWARD 2021

國家品牌玉山獎 THE NATIONAL BRAND YUSHAN AWARD 2022

新北企業精典獎 2022

國家品牌玉山獎 THE NATIONAL BRAND YUSHAN AWARD 2023

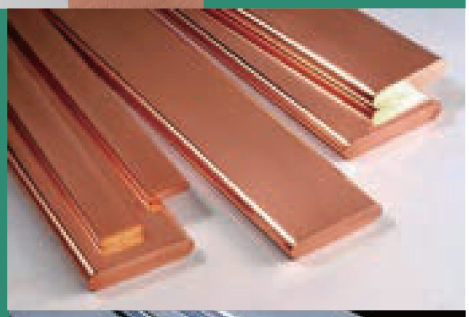

銅排絕緣披覆盒

絕緣被覆盒，有效解決配電盤內銅排和開關連接處絕緣需求，材料輕巧方便安裝及拆卸，並有三個類型可廣泛應用於各種銜接，如有特殊搭接需求，也可另外製作模具生產。

L、T、I型

L 型

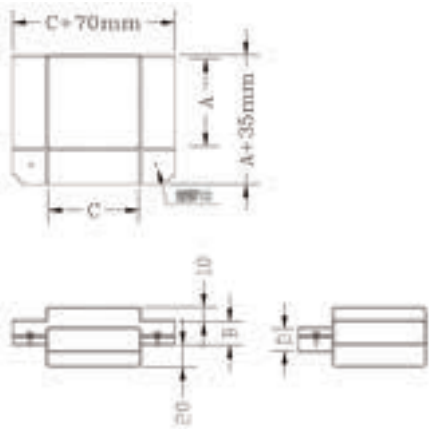

L型COVER						
型號	A	B	C	D	(A)主銅排規格	(C)分路銅排規格
L01	45	25	45	25	10T*40-1/φ	10T*40-1/φ
L02	55	25	55	25	10T*50-1/φ	10T*50-1/φ
L03	65	25	65	25	10T*60-1/φ	10T*60-1/φ
L04	55	35	55	35	10T*50-2/φ	10T*50-1/φ
L05	55	45	55	45	10T*50-2/φ	10T*50-2/φ
L06	105	25	105	25	10T*100-1/φ	10T*100-1/φ
L07	105	45	85	45	10T*100-2/φ	10T*80-2/φ
L08	105	15	55	35	10T*100-1/φ	10T*50-2/φ
L09	105	25	55	25	10T*100-1/φ	10T*50-1/φ
L10	85	15	45	35	10T*80-1/φ	10T*40-2/φ
L11	85	25	55	25	10T*80-1/φ	10T*50-1/φ
L12	85	55	85	55	10T*80-3/φ	10T*80-2/φ
L13	85	65	85	65	10T*80-3/φ	10T*80-3/φ
L14	85	25	85	25	10T*80-1/φ	10T*80-1/φ
L15	85	15	55	35	10T*80-1/φ	10T*50-2/φ
L16	105	45	105	45	10T*100-2/φ	10T*100-2/φ
L17	85	45	85	45	10T*80-2/φ	10T*80-2/φ
L18	55	25	35	25	10T*50-1/φ	10T*30-1/φ
L19	45	45	45	45	10T*40-2/φ	10T*40-2/φ
L20	45	45	85	45	10T*40-2/φ	10T*80-2/φ
L21	105	45	65	45	10T*100-2/φ	10T*60-2/φ
L22	65	45	65	45	10T*60-2/φ	10T*60-2/φ
L23	125	65	125	65	10T*120-3/φ	10T*120-3/φ
L24	85	35	45	15	10T*80-2/φ	10T*40-1/φ
L25	125	45	125	45	10T*120-2/φ	10T*120-2/φ
L26	125	45	85	45	10T*120-2/φ	10T*80-2/φ
L27	65	25	45	25	10T*60-1/φ	10T*40-1/φ
L28	65	45	65	45	10T*60-2/φ	10T*60-2/φ
L29	65	55	105	55	10T*60-3/φ	10T*100-2/φ
L30	125	55	85	55	10T*120-2/φ	10T*80-3/φ

T 型

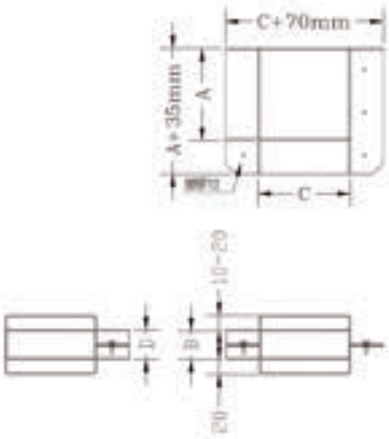

T型COVER						
型號	A	B	C	D	(A)主銅排規格	(C)分路銅排規格
T01	45	15	45	15	10T*40-1/φ	10T*40-1/φ
T02	55	15	55	15	10T*50-1/φ	10T*50-1/φ
T03	65	15	65	15	10T*60-1/φ	10T*60-1/φ
T04	105	15	45	15	10T*100-1/φ	10T*40-1/φ
T05	55	35	55	15	10T*50-2/φ	10T*50-1/φ
T06	55	35	55	35	10T*50-2/φ	10T*50-2/φ
T07	105	35	85	35	10T*100-2/φ	10T*80-2/φ
T08	85	15	45	35	10T*80-1/φ	10T*40-2/φ
T09	85	15	85	15	10T*80-1/φ	10T*80-1/φ
T10	65	15	55	15	10T*60-1/φ	10T*50-1/φ
T11	55	15	35	15	10T*50-1/φ	10T*30-1/φ
T12	125	15	45	15	10T*120-1/φ	10T*40-1/φ
T13	105	15	55	35	10T*100-1/φ	10T*50-2/φ
T14	85	15	55	15	10T*80-1/φ	10T*50-1/φ
T15	105	15	55	15	10T*100-1/φ	10T*50-1/φ
T16	105	15	105	15	10T*100-1/φ	10T*100-1/φ
T17	85	45	85	35	10T*80-3/φ	10T*80-2/φ
T18	55	35	105	15	10T*50-2/φ	10T*100-1/φ
T19	85	15	55	35	10T*80-1/φ	10T*50-2/φ
T20	55	35	105	35	10T*50-2/φ	10T*100-2/φ
T21	105	35	105	35	10T*100-2/φ	10T*100-2/φ
T22	105	35	55	35	10T*100-2/φ	10T*50-2/φ
T23	45	35	55	15	10T*40-2/φ	10T*50-1/φ
T24	45	35	85	15	10T*40-2/φ	10T*80-1/φ
T25	85	15	45	15	10T*80-1/φ	10T*40-1/φ
T26	65	15	105	15	10T*60-2/φ	10T*100-2/φ
T27	105	15	65	15	10T*100-2/φ	10T*60-2/φ
T28	85	35	55	15	10T*80-2//φ	10T*50-1/φ
T29	125	55	125	55	10T*120-3/φ	10T*120-3/φ
T30	125	55	85	55	10T*120-3/φ	10T*80-3/φ
T31	105	35	55	15	10T*100-2/φ	10T*50-1/φ
T32	85	35	85	35	10T*80-2/φ	10T*80-2/φ
T33	85	35	85	15	10T*80-2/φ	10T*80-1/φ
T34	125	35	105	65	10T*120-2/φ	10T*100-4/φ
T35	55	15	55	35	10T*50-1/φ	10T*50-2/φ
T36	65	15	35	15	10T*60-1/φ	10T*30-1/φ
T37	65	35	65	35	10T*60-2/φ	10T*60-2/φ
T38	55	35	85	35	10T*50-1/φ	10T*80-1/φ
T39	105	15	65	15	10T*100-1/φ	10T*60-1/φ

I 型

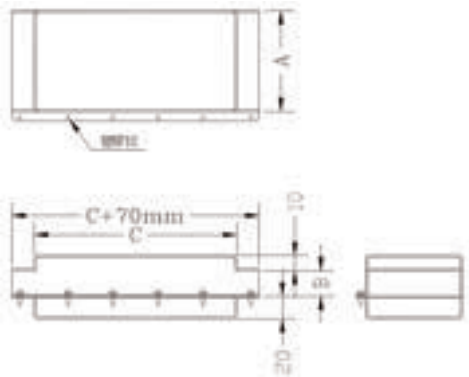

I型COVER				
型號	A	B	C	適用規格
I01	45	15	100	10T*40-1/φ
I02	55	15	120	10T*50-1/φ
I03	65	15	140	10T*60-1/φ
I04	105	15	220	10T*100-1/φ
I05	55	35	120	10T*50-2/φ
I06	85	15	180	10T*80-1/φ
I07	85	55	180	10T*80-3/φ
I08	85	35	200	10T*80-2/φ
I09	105	35	240	10T*100-2/φ
I10	45	35	100	10T*40-2/φ
I11	55	15	55	10T*50-1/φ-1
I12	55	15	180	10T*50-1/φ-2
I13	125	55	260	10T*120-3/φ
I14	125	35	260	10T*120-2/φ
I15	45	15	180	10T*40-1/φ-1
I16	105	55	120	10T*100-2/φ-1
I17	65	55	140	10T*60-2/φ
I18	65	15	180	10T*60-1/φ-1
I19	85	0	180	10T*80/0
I20	85	15	85	10T*80/1-1
I21	45	15	45	10T*40/1-2
I22	105	35	220	10T*100-2/φ-2
I23	65	55	140	10T*60-3/φ
I24	55	55	55	10T*50-2/φ-1
I25	105	75	220	10T*100-4
I26	105	75	290	10T*100-4/φ-1
I27	105	35	105	10T*100-2/φ
I28	85	55	85	10T*80-3/φ
I29	65	15	65	10T*60-1/φ

※ 1.非標準品歡迎來電洽詢。

23876

新北市樹林區武林街2之3號

T 02-26818008 **F** 02-26816006

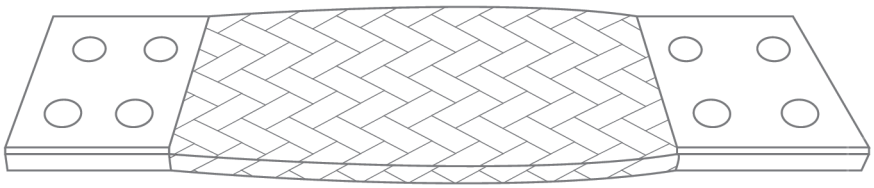

www.horngyu.com